इंटरनेट मानक

Disclosure to Promote the Right To Information

Whereas the Parliament of India has set out to provide a practical regime of right to information for citizens to secure access to information under the control of public authorities, in order to promote transparency and accountability in the working of every public authority, and whereas the attached publication of the Bureau of Indian Standards is of particular interest to the public, particularly disadvantaged communities and those engaged in the pursuit of education and knowledge, the attached public safety standard is made available to promote the timely dissemination of this information in an accurate manner to the public.

"जानने का अधिकार, जीने का अधिकार"
Mazdoor Kisan Shakti Sangathan
"The Right to Information, The Right to Live"

"पुराने को छोड नये के तरफ"
Jawaharlal Nehru
"Step Out From the Old to the New"

IS 6857 (1972): Specification for Separator, Double-Bow, Dental [MHD 8: Dentistry]

"ज्ञान से एक नये भारत का निर्माण"
Satyanarayan Gangaram Pitroda
"Invent a New India Using Knowledge"

Act Number 22 of 2005
The Indian Parliament
RIGHT TO INFORMATION

Made Available By
Public.Resource.Org

"ज्ञान एक ऐसा खजाना है जो कभी चुराया नहीं जा सकता है"
Bhartṛhari—Nītiśatakam
"Knowledge is such a treasure which cannot be stolen"

BLANK PAGE

BRUTUM FULMEN

IGNORANTIA JURIS NON EXCUSAT

PROTECTED BY COPYRIGHT

Indian Standard (Reaffirmed 1998)

SPECIFICATION FOR SEPARATOR, DOUBLE-BOW, DENTAL

1. Scope — Dimensions and other requirements for double-bow separator used in dentistry.

2. Shape and Dimensions — As shown in Fig. 1.

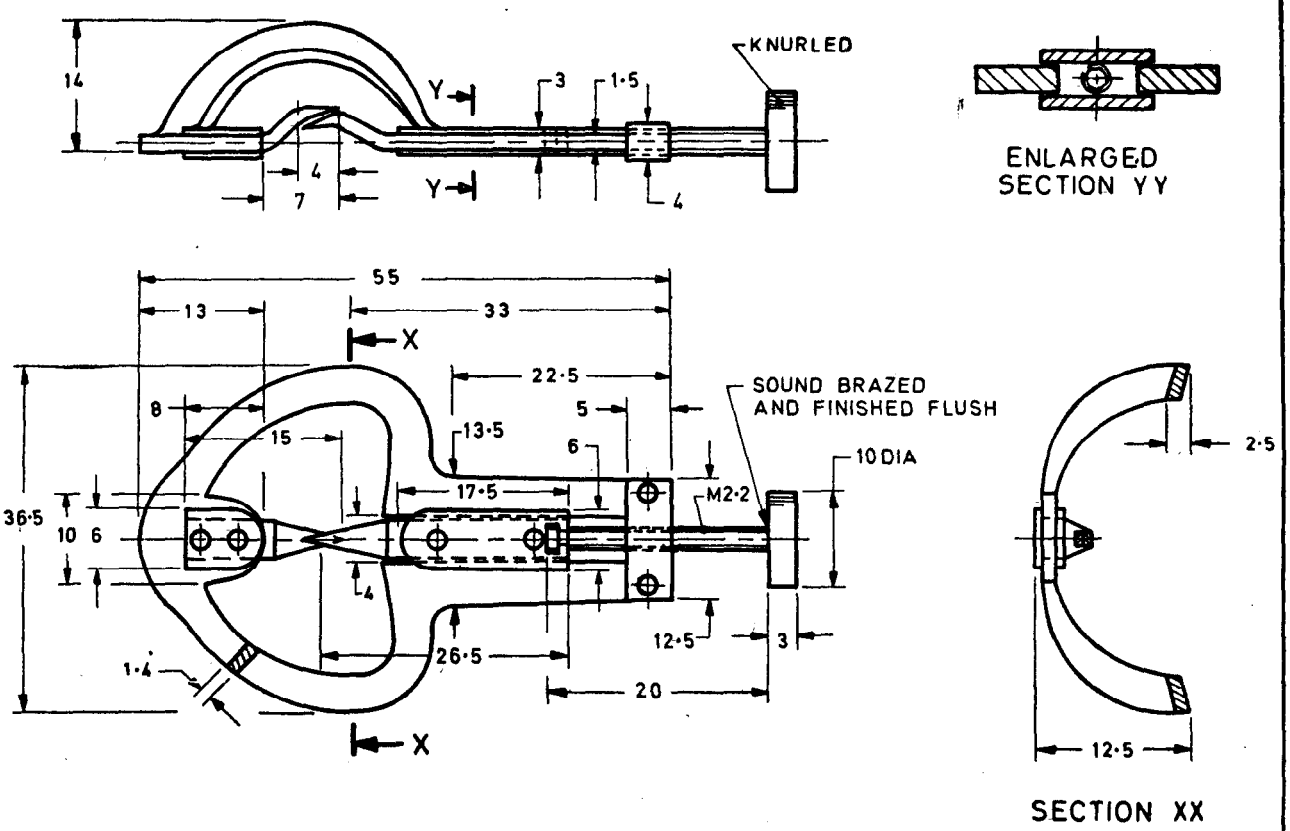

All dimensions in millimetres.

FIG. 1 SEPARATOR, DOUBLE-BOW, DENTAL

3. Material — Brass strip, Designation CuZn30 of IS : 410-1967 'Specification for rolled brass plate, sheet, strip and foil (*second revision*)' for all the parts except threaded portion which shall conform to brass rods, Designation CuZn38Pb3 of IS : 319-1968 'Specification for free-cutting brass rods and sections (*second revision*)'.

4. Workmanship and Finish — The riveting shall be sound and firm. There shall be no side play in the instrument. The instrument shall be free from surface defects. There shall be no non-functional sharp edges in the instrument which could cause injury during normal use. The instrument shall be plated chromium over nickel and the plating shall conform to Service Grade No. 2 of IS : 4827-1968 'Specification for electroplated coatings of nickel and chromium on copper and copper alloys'.

5. Marking — The instrument shall be marked with the manufacturer's name, initials or trade-mark, and the country of manufacture.

5.1 *ISI Certification Marking* — Details available with the Indian Standards Institution.

6. Packing — As agreed to between the purchaser and the supplier.

Adopted 22 September 1972 | © May 1973, ISI | Gr 1

INDIAN STANDARDS INSTITUTION
MANAK BHAVAN, 9 BAHADUR SHAH ZAFAR MARG
NEW DELHI 110002

Dental Instruments Sectional Committee, CPDC 21: Dental Cutting and Filling Instruments Subcommittee, CPDC 21 : 1 [Ref: Doc: CPDC 21 (653)]

Printed at Simco Printing Press, Delhi, India